arteche

GAS INSULATED INSTRUMENT TRANSFORMERS

FOR AIR INSULATED SWITCHGEARS

SF_6 INSULATED CURRENT TRANSFORMERS

The current transformer consists of one or several cores with their corresponding secondary windings (active parts) The active parts are located in the top part, inside a metal box that acts as a low-voltage shield surrounded by SF_6 gas insulation.

The primary conductor can be a pass-through bar with or without external reconnection. The secondary conductors run through a low voltage tube to the secondary terminal block. Around this metal tube, there is a high voltage electrode so that the electrical field is properly distributed. A filling valve for SF_6 gas is provided at the bottom part together with a temperature compensated manometer for monitoring gas pressure.

ADVANTAGES

- Robust mechanical strength and reduced size due to a compact and light design that is easy to transport, store and install, and which reduces visual impact.
- Consistent and very high accuracy during the transformer's entire service life (up to 0.1%), providing maximum reliability.

SECTIONS

1. Primary terminal
2. Cores and secondary windings
3. Primary winding
4. Secondary conductors
5. Insulator (silicone rubber)
6. Reinforced earth connection
7. Secondary terminal box
8. Pressure relief device
9. Head
10. Manometer
11. HV electrode
12. Filling valve

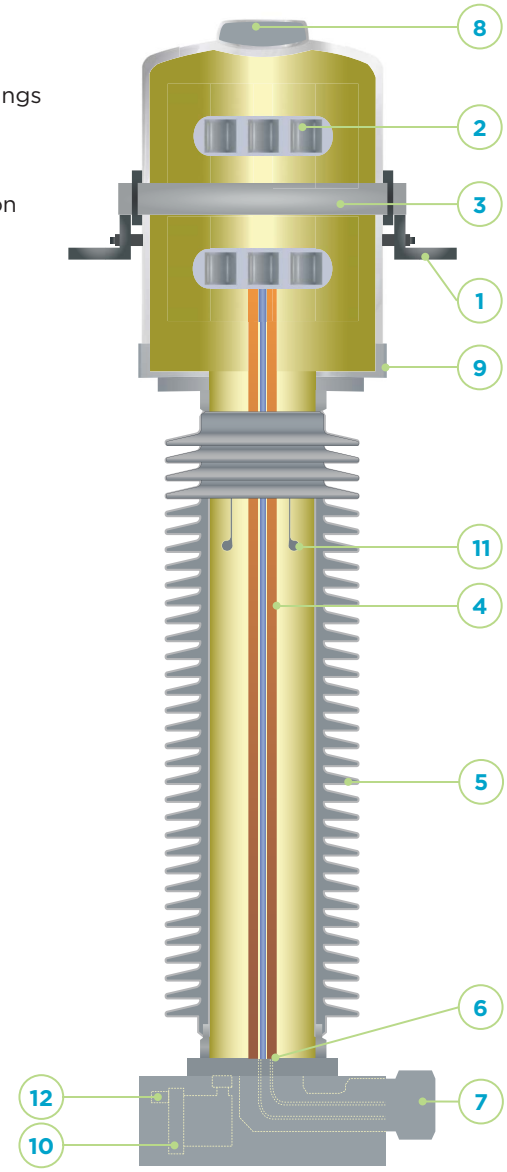

› 362 kV Current transformers. South Grid (China).

Model CG

Model	Highest voltage (kV)	Rated insulation level			Standard creepage distance (mm)	Dimensions		Weight (kg)
		Power frequency (kV)	Lightning impulse (BIL) (kVp)	Switching Impulse (kVp)		Base (mm)	Height (mm)	
CG-145	123	230	550	-	3,625	450x450	2,330	205
CG-145	145	275	650	-	3,625	450x450	2,330	205
CG-170	170	325	750	-	4,250	450x450	2,505	235
CG-245	245	395	950	-	6,125	450x450	3,370	400
		460	1,050	-				
CG-300	300	460	1,050	850	7,500	450x450	3,755	430
CG-362	362	510	1,175	950	11,222	600x600	5,080	1,650
CG-420	420	630	1,425	1,050	13,020	800x800	5,580	1,700
CG-550	550	680	1,550	1,175	17,050	800x800	6,580	1,800

Approximate dimensions and weights. For special requirements, please consult.

Primary currents: up to 5,000 A. Short circuit currents: up to 120 kA/1 s.

SF_6 INSULATED VOLTAGE TRANSFORMERS

Voltage transformers consists of a magnetic core inside a metallic tank with its primary and secondary windings around it. These windings are made of heat-resisting electric wires coated in synthetic resin and a layer of plastic with a high dielectric resistance and excellent thermal and mechanical performance. The SF_6 and the plastic layer form the electrical insulation. A filling valve for SF_6 gas is provided on a side of tank together with a temperature compensated manometer for monitoring gas pressure.

ADVANTAGES

- High-reliability of insulation. A superior distribution of electric field in primary windings ensures high-reliability against incoming surge voltage.
- Suitable for line discharge.
- Robust mechanical strength and reduced size due to a compact and light design that is easy to transport, store and install, and which reduces visual impact.
- Consistent and very high accuracy during the transformer's entire service life (up to 0.1%), providing maximum reliability.

SECTIONS

1. Primary terminal
2. Pressure relief device
3. H.V. electrode
4. Insulator (silicone rubber)
5. L.V. electrode
6. Primary winding
7. Secondary winding
8. Core
9. Manometer
10. Secondary terminal box
11. Filling valve

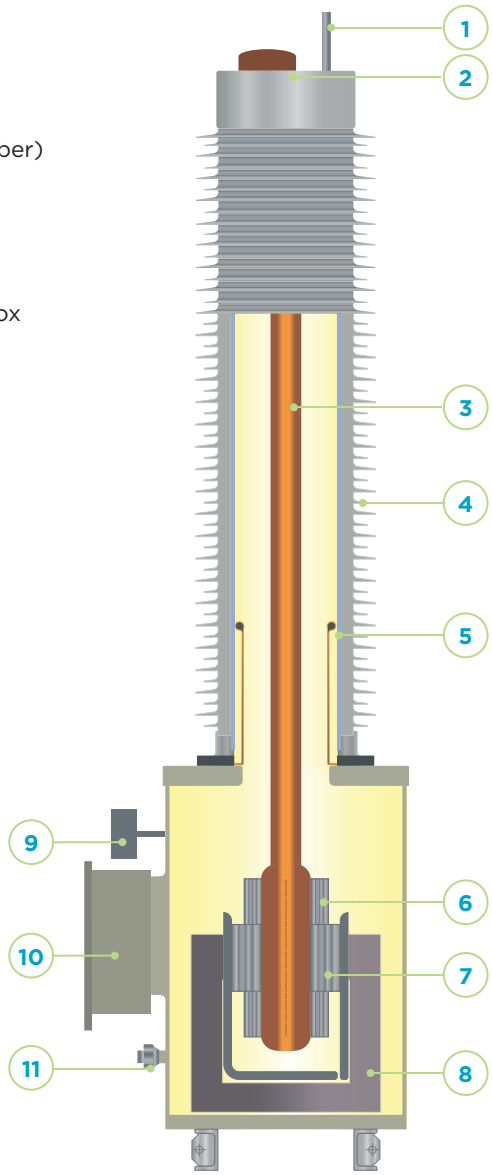

› 420 kV Voltage transformers. REE (Spain).

Model UG > AIS VT

Model	Highest voltage (kV)	Rated insulation level			Thermal burden (VA)	Standard creepage distance (mm)	Dimensions		Weight (kg)
		Power frequency (kV)	Lightning impulse (BIL) (kVp)	Switching Impulse (kVp)			Base (mm)	Height (mm)	
UG-123	123	230	550	-	1,000	3,813	315 x 315	2,400	450
UG-145	145	275	650	-	1,000	4,495	315 x 315	2,400	450
UG-170	170	325	750	-	1,000	5,270	315 x 315	2,600	470
UG-245	245	460	1,050	-	1,000	7,595	450 x 450	3,200	650
UG-300	300	460	1,050	850	1,000	9,300	450 x 450	3,550	700
UG-362	362	510	1,175	950	1,000	11,222	600 x 600	3,900	1,100
UG-420	420	630	1,425	1,050	1,000	13,020	600 x 600	4,600	1,200
UG-550	550	680	1,550	1,175	1,000	17,050	600 x 600	5,100	1,300

Approximate dimensions and weights. For special requirements, please consult.

POWER VOLTAGE TRANSFORMERS

This type of voltage transformer can supply several kVA low voltage power directly from a high voltage transmission line. It offers all the benefits of a potential transformer with the applications of a distribution transformer.

APPLICATIONS

1. **Substations auxiliary services power supply:**
   Power supply in conventional substations where low voltage power is needed as a primary or back-up supply; or in remote areas where building distribution lines is unsafe and with unreliable supply that requires frequent maintenance and high costs. It can also be used as a primary power source in switching substations without power transformers to supply the substation and SCADA control systems.
2. **Power supply for telecommunication and monitoring systems:**
   High quality electrical supply for booster antennas in remote locations using a voltage transformer connected to a nearby transmission line.
3. **Rural electrification of isolated populations:**
   As a power source for supplying reliable power to rural populations in isolated areas where there are no distribution lines nearby, but there are transmission lines. This particular application supplies low voltage power directly from HV line in an economical and practical way.
4. **Temporary power supply** when building substations, wind farms, etc., and emergency supply during natural disasters.

ADVANTAGES

The conventional solution used for the previously mentioned applications is a dedicated medium voltage line. ARTECHE's voltage transformer for auxiliary services has the following advantages:

- Social benefits. Electrification of isolated rural areas, emergency power after natural disasters...
- Independent power supply, more flexible as the user does not have to depend on third parties.
- Cost effective.
- Quick and flexible solution compared to building new lines, since there is no need to apply for license, conduct environmental studies, use eminent domain, etc.).
- Highly reliable power source within the substation.
- Safety for the most critical equipment in the substation (power transformer). Low voltage and auxiliary services are the most unreliable uses. With this solution there is no need for a tertiary winding that could put the power transformer in risk.
- Dual function, it can be used as a power source and as an instrument transformer in a single unit, since it can also be used for metering and/or protection.
- PT100 temperature sensor available.

Power voltage transformers are designed following both Instrument transformers and power transformers standards:

- Instrument transformers as per IEC 61869-3, IEEE C57.13.
- Power transformers as per IEC 60076, IEEE C57.12.00.

Model UG > PVT

Model	Highest voltage (kV)	Rated insulation level			Burden (kVA)	Standard creepage distance (mm)	Dimensions		Weight (kg)
		Power frequency (kV)	Lightning impulse (BIL) (kVp)	Switching Impulse (kVp)			Base (mm)	Height (mm)	
UG-72	72.5	140	325	-	50	2,248	600x600/1,200x1,200	2,250	< 3,500
UG-145	123	230	550	-	100	3,813	600x600/1,200x1,200	3,100	< 3,500
	145	275	650	-	100	4,495	600x600/1,200x1,200	3,100	< 3,500
UG-245	170	325	750	-	100	5,270	600x600/1,200x1,200	3,300	< 3,500
	245	460	1,050	-	100	7,595	600x600/1,200x1,200	3,800	< 3,500
	300	460	1,050	850	100	9,300	600x600/1,200x1,200	4,200	< 3,500
UG-420	362	510	1,175	950	100	11,222	900x900/1,200x1,200	4,600	< 3,500
	420	630	1,425	1,050	100	13,020	900x900/1,200x1,200	5,300	< 3,500
UG-550	550	680	1,550	1,175	100	17,050	900x900/1,200x1,200	5,800	< 3,500

Approximate dimensions and weights. For special requirements, please consult.

FEATURES

- Total safety in case of internal arc: Overpressure is relieved by the pressure relief device (rupture disc) in the top part of the transformer.
- Variety of designs for greater adaptation to client needs.
- Designed to minimize gas volume, pressure and leaks, with a leakage rate <0,5%/year (lower values on request), thus reducing its environmental impact.
- Hermetically sealed to guarantee complete water tightness (Each unit is tested individually).
- Excellent response under extreme weather conditions, high altitudes, seismic hazard areas, violent winds, etc.
- Online monitoring of the insulation status with a manometer alarm.
- Tanks and insulators are designed manufactured and tested according to international pressure vessel standards.
- Designed to withstand rated voltage with internal atmospheric gas pressure.
- Maintenance-free throughout their lifespan.
- May be transported and stored horizontally or vertically.
- The silicone rubber insulator guarantees safety during transportation and service as well as best performance against highest pollution conditions.
- Corrosion resistant design with weather resistant aluminium housing.
- Wide range of primary and secondary terminals.
- Different cable glands and accessories available.
- Each transformer is routine tested for partial discharges, insulation and accuracy. Designed to withstand all the type test included in the standards.
- Compliance to any international standards: IEC, IEEE, UNE, BS, VDE, SS, CAN, AS, NBR, JIS, GOST, NF...
- Officially homologated in-house testing facilities.

ARTECHE has the technology and capacities of instrument transformers. Thus we provide the best solution available on the market.

QUALITY

ARTECHE group follows total quality criteria. We maintain standardized process and procedures for continuous growth throughout the company worldwide.

MANAGEMENT:

- ISO 9001:2008.
- OHSAS 18001:2007.
- Quality agreements with utilities.
- Internal and external skill motivation programs.
- Advanced development of knowledge management.

CONTROL:

- Physicochemical and electrical laboratories for testing of products and components according to international standards.
- Type test reports issued by KEMA, CESI, LABEIN, LAPEM, RENARDIÈRES...
- Final testing according to specific customer requirements.

ENVIRONMENT:

- ISO 14001:2004.
- Compact design manufactured with minimal energy consumption and environmental friendly materials.

SERVICE

- With companies on four continents and more than 100 sales and technical support offices.
- Active participant in the most important electrical organizations: IEC, IEEE, CIGRE, CIRED, ASINEL, etc.
- Customer-focused, which translates into an after-sales comprehensive assistance plan.
- Quick response, including a continuous improvement plan.
- Comprehensive training program by means of seminars, publications, symposiums, etc.

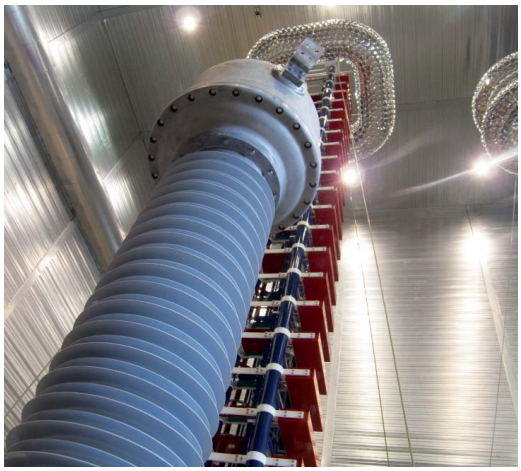

- 245 kV Current transformer routine tested in ARTECHE's laboratory.
- ARTECHE new ultra high voltage laboratory up to 1,200 kV.

arteche
Moving together

For more detailed information,
please visit us at www.arteche.com

ARTECHE_FY_GasIT_EN
Version: A2